Pool Breakdown

OHANA 15’ X 26’ OVAL 52”

This first page lists the quantity, carton number, and carton description for each individual box and/or pallet in your shipment. Check that the numbers and descriptions on your checklist match identically to those on the cartons. Make sure that the pool type, model, shape, and size also line up perfectly. If something is off, even by one number, check to make sure that you have the correct checklist for your pool type and if so, contact our support team immediately at support@royalswimmingpools.com.

√	Qty	Carton Product Number #	Carton Content Description
☐	1	371526713727	3/7 1526 713727 ZENITH CLAY TEXTURED 52"
☐	1	471526713727	4/7 1526 713 727 ZENITH CLAY TEXT 52"
☐	1	5720801-6	KIT 6 T UNIT PAINTED
☐	1	67STD1812231526	6/7 12231526 713-23-27-35-36-37-43-65-73
☐	1	771526727	7/7 1526 727 ZENITH CLAY TEXTURED
☐	1	WPRA52S-WMN1526-0838	WALL: PRAIRIES 52" STEEL WM 1526

Once you have all of the cartons listed above, continue to the next page. There should be one table per carton and each carton should be gone through entirely before moving on to the next.

Please ensure that you have received the proper quantity for each item listed.

DO NOT THROW CARTONS/BOXES AWAY UNTIL AFTER THE INSTALLATION IS COMPLETE. We recommend taking photos of all labels/stickers on the boxes.

In the unlikely event that you are missing items, please refer to the document Inventory Checklist and Reporting Missing Items that was previously emailed to you.

Once you have ALL items listed on the entire inventory checklist, refer to your safety handbook and installation manual before you start the building process.

Carton Breakdown

OHANA 15’ X 26’ OVAL 52”

Carton Product Number #	Carton Content Description
371526713727	3/7 1526 713727 ZENITH CLAY TEXTURED 52"

√	Key #	Qty	Part #	Part Description
☐	A	**10**	ART211-1295048	TOP LEDGE ZENITH CLAY TEXTURED 48.000"
☐	A	**8**	ART211-1295044	TOP LEDGE ZENITH CLAY TEXTURED 44.000"

*Below items will contain no actual pool parts; just packaging/shipping materials

Qty	Part #	Part Description
2	BTE541808	BOX TEL REVERSIBLE 54"X18"X08" 275C

Carton Product Number #	Carton Content Description
471526713727	4/7 1526 713 727 ZENITH CLAY TEXT 52"

√	Key #	Qty	Part #	Part Description
☐	B	**18**	ART711-R12954M	UPRIGHT ZENITH CLAY TEXT REG 51.750"

*Below items will contain no actual pool parts; just packaging/shipping materials

Qty	Part #	Part Description
2	BTE541810	BOX TEL REVERSIBLE 54"X18"X10" 275C

CUSTOMER SUPPORT CAN BE REACHED AT ANY OF THE FOLLOWING:
CALL: 901-372-1773
TEXT: 901-472-7797
EMAIL: support@royalswimmingpools.com

Carton Breakdown

OHANA 15’ X 26’ OVAL 52”

Carton Product Number #	Carton Content Description
5720801-6	KIT 6 T UNIT PAINTED

√	Key #	Qty	Part #	Part Description
☐	M	**6**	1000100	STYROFOAM BLOCK FOR T UNIT
☐	K	**6**	20801	T UNIT PAINTED

Carton Product Number #	Carton Content Description
67STD1812231526	6/7 12231526 713-23-27-35-36-37-43-65-73

√	Key #	Qty	Part #	Part Description
☐	J	**4**	20809	BRACE PLATE BRACELESS GALVANISED 47.00"
☐	O	**6**	20506	REINFORCEMENT PART ZENITH GALV 51.000"

*Below items will contain no actual pool parts; just packaging/shipping materials

Qty	Part #	Part Description
2	BTE521604	BOX 52" X 16" X 4-1/2"

CUSTOMER SUPPORT CAN BE REACHED AT ANY OF THE FOLLOWING:
CALL: 901-372-1773
TEXT: 901-472-7797
EMAIL: support@royalswimmingpools.com

Carton Breakdown

OHANA 15’ X 26’ OVAL 52”

Carton Product Number #	Carton Content Description
771526727	7/7 1526 727 ZENITH CLAY TEXTURED

√	Key #	Qty	Part #	Part Description
☐	C	**18**	AR211-23120ABC	LEDGE COVER ZENITH CLAY
☐	*	**1**	SAC12539-24	BAG 24 WALL CHANNEL
☐	M	**6**	20810	HORIZONTAL SLEEVE GALV WITH PEN NUTS 17"
☐	N	**9**	20560	STEEL STRAP GALVANIZED BRACELESS 59.750"
☐	F	**8**	LA1254141	WALL CHANNEL OMEGA TEXT 27D 41.00"
☐	*	**1**	SACV12X34-184	BAG 184 SCREW 12-3/4 STAINLESS
☐	F	**20**	LA1254715	WALL CHANNEL OMEGA TEXT 15D 47.750"
☐	E	**6**	21134	UPPER JOINER PLATE STRAIGHT SIDE
☐	E	**6**	21124	JOINER PLATE ZENITH REINFORCEMENT
☐	*	**1**	SACWBI36876	SAC DVD D`INSTALLATION TRENDIUM
☐	F	**8**	LA1254138	WALL CHANNEL OMEGA TEXT 27D 38.00"
☐	D	**18**	AR711-23300AC	UPRIGHT COVER ZENITH CLAY
☐	N	**9**	20560	STEEL STRAP GALVANIZED BRACELESS 59.750"
☐	*	**1**	SACSJF-6	HARDWARE KIT BRACELESS (6x"T")
☐	M	**6**	20802	HORIZONTAL SLEEVE GALVANIZED 17"
☐	*	**2**	SACVCP-POV	BAG SCREW 1/2"-12 CROWN
☐	E	**24**	21120A	JOINER PLATE ZENITH GALVANIZED

*Below items will contain no actual pool parts; just packaging/shipping materials

Qty	Part #	Part Description
2	BTE601710	BOX 60" X 17 1/2" X 10" TOP/BOTTOM 200BC PRINTED

CUSTOMER SUPPORT CAN BE REACHED AT ANY OF THE FOLLOWING:
CALL: 901-372-1773
TEXT: 901-472-7797
EMAIL: support@royalswimmingpools.com

Ohana 52
Oval

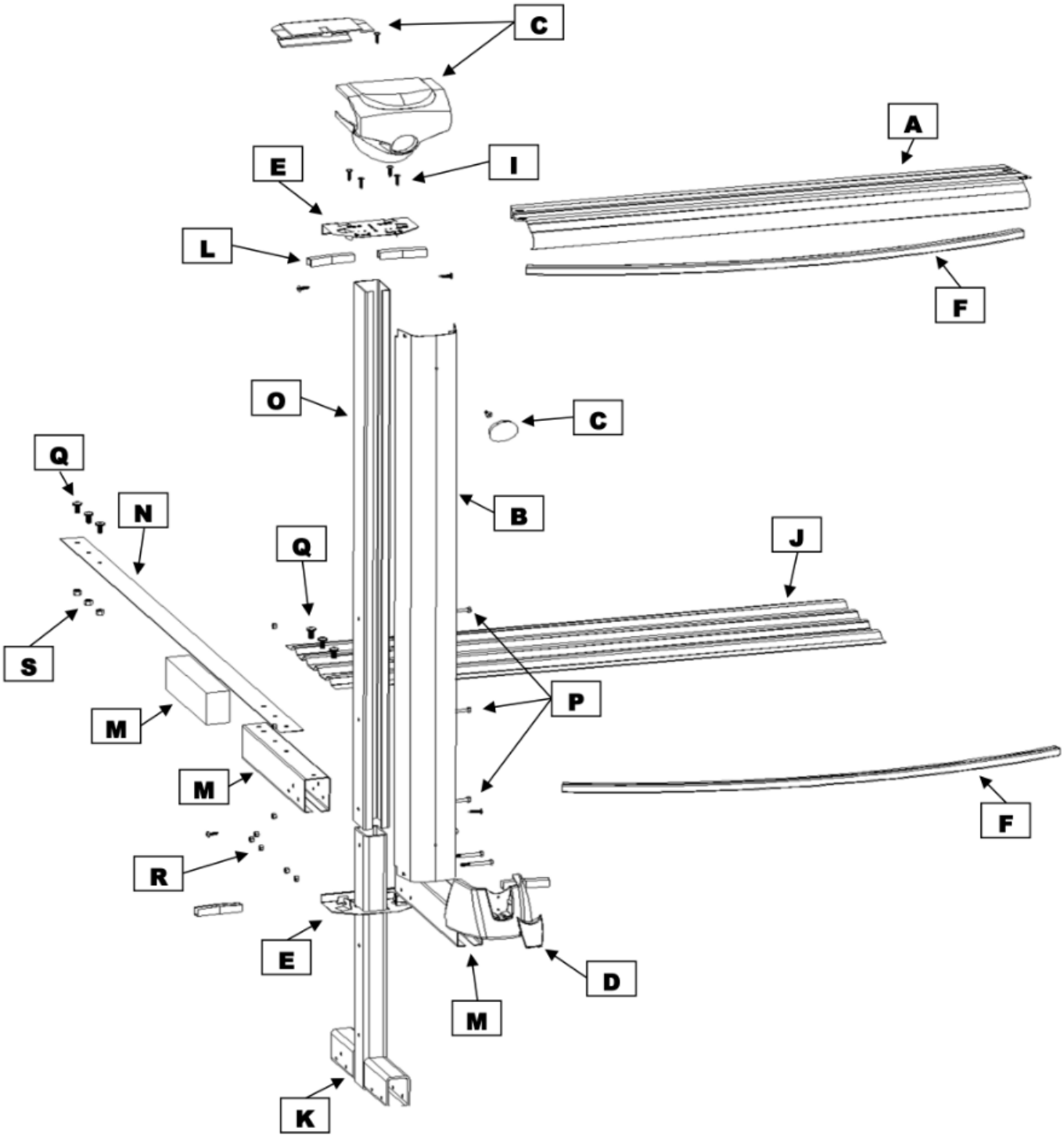

CUSTOMER SUPPORT CAN BE REACHED AT ANY OF THE FOLLOWING:
CALL: 901-372-1773
TEXT: 901-472-7797
EMAIL: support@royalswimmingpools.com