P/N: IS3200
Rev. F

HAYWARD®

OWNER'S MANUAL

INSTALLATION, OPERATION, & PARTS

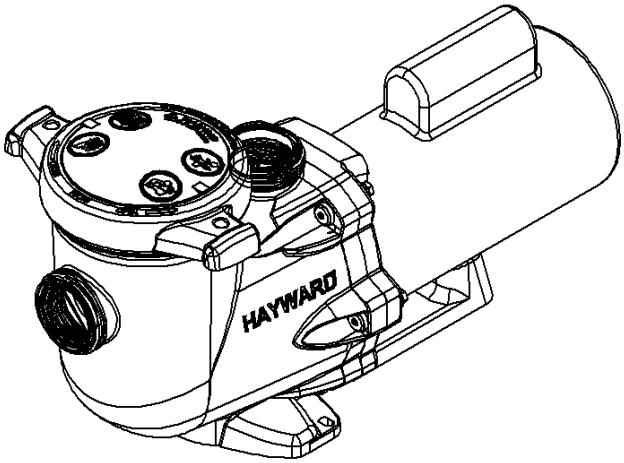

*50HZ Models are not UL Listed.

TriStar® Pump Series

The Hayward TriStar Pump is specifically engineered for the demanding requirements of today's in-ground swimming pool/spa that is equipped with large capacity filters, heaters, and pool cleaning equipment. The TriStar is a self-priming pump that includes an improved seal and impeller design that will provide many years of efficient, dependable, corrosion-free service. The advanced design provides superior performance while reducing maintenance requirements. **NOTE -** To prevent potential injury and to avoid unnecessary service calls, read this manual carefully and completely.

IMPORTANT – READ CAREFULLY

NOTE - The TriStar is a high performance, high efficiency pump. When replacing most existing pumps, **you can use a TriStar pump with a lower horsepower rating than the existing pump.**

Required: 2" plumbing minimum
Recommended: 2 ½" plumbing or larger

TriStar Pump Replacement Guide

TriStar Model No. **Full** Rated	**TriStar** Model No. **Max** Rated	**Super II** Model No. **Full** Rated	**Super II** Model No. **Max** Rated
---	SP3207X10	SP3007EEAZ	SP3007X10AZ
SP3207EE	SP3210X15	SP3010EEAZ	SP3010X15AZ
SP3210EE	SP3215X20	SP3015EEAZ	SP3015X20AZ
SP3215EE	SP3220X25	SP3020EEAZ	SP3020X25AZ
SP3220EE	SP3225X30	SP3025EEAZ	SP3025X30AZ
SP3230EE	---	---	---

SAVE THIS INSTRUCTION MANUAL

HAYWARD POOL PRODUCTS

620 DIVISION STREET ELIZABETH, NJ 07207 (908) 351-5400
WWW.HAYWARDPOOL.COM

IMPORTANT SAFETY INSTRUCTIONS

Before installing or servicing this electrical equipment, turn power supply OFF.

Basic safety precautions should always be followed, including the following: Failure to follow instructions may result in injury.

⚠ This is the safety-alert symbol. When you see this symbol on your pump or in this manual, look for one of the following signal words and be alert to the potential for personal injury.

⚠ **WARNING** warns about hazards that **could** cause serious personal injury, death or major property damage and if ignored presents a potential hazard.

⚠ **CAUTION** warns about hazards that **will** or **can** cause minor or moderate personal injury and/or property damage and if ignored presents a potential hazard. It can also make consumers aware of actions that are unpredictable and unsafe.

The **NOTICE** label indicates special instructions that are important but not related to hazards.

⚠ WARNING – Read and follow all instructions in this owner's manual and on the equipment. Failure to follow instructions can cause severe injury and/or death.

⚠ **WARNING –** This product should be installed and serviced only by a qualified professional.

⚠ **CAUTION –** All electrical wiring MUST be in conformance with all applicable local codes, regulations, and the National Electric Code (NEC).

Use of non-Hayward replacement parts voids warranty.

ATTENTION INSTALLER – THIS MANUAL CONTAINS IMPORTANT INFORMATION ABOUT THE INSTALLATION, OPERATION, AND SAFE USE OF THIS PUMP THAT MUST BE FURNISHED TO THE END USER OF THIS PRODUCT. FAILURE TO READ AND FOLLOW ALL INSTRUCTIONS COULD RESULT IN SERIOUS INJURY.

⚠ **WARNING –** To reduce risk of injury, do not permit children to use or climb on this product. Closely supervise children at all times. Components such as the filtration system, pumps, and heaters must be positioned to prevent children from using them as a means of access to the pool.

⚠ **CAUTION –** This pump is intended for use on permanently installed swimming pools and may also be used with hot tubs and spas if so marked. Do NOT use with storable pools. A permanently installed pool is constructed in or on the ground or in a building such that it cannot be readily disassembled for storage. A storable pool is constructed so that it is capable of being readily disassembled for storage and reassembled to its original integrity. Though this product is designed for outdoor use, it is strongly advised to protect the electrical components from the weather. Select a well-drained area, one that will not flood when it rains. It requires free circulation of air for cooling. Do not install in a damp or non-ventilated location. If installed within an outer enclosure or beneath the skirt of a hot tub or spa, adequate ventilation and free circulation of air must be provided to prevent overheating of the motor.

⚠ **WARNING –** Pool and spa components have a finite life. All components should be inspected frequently and replaced at least every ten years, or if found to be damaged, broken, cracked, missing, or not securely attached.

⚠ **WARNING – Risk of Electric Shock.** All electrical wiring MUST be in conformance with all applicable local codes, regulations, and the National Electric Code (NEC). Hazardous voltage can shock, burn, and cause death or serious property damage. To reduce the risk of electric shock, do NOT use an extension cord to connect unit to electric supply. Provide a properly located electrical receptacle. Before working on pump or motor, turn off power supply to the pump.

⚠ **WARNING –** To reduce the risk of electric shock replace damaged wiring immediately. Locate conduit to prevent abuse from lawn mowers, hedge trimmers and other equipment.

⚠ **WARNING –** It is recommended to install a Ground Fault Circuit Interrupter (GFCI) in the circuit, however, all electrical wiring MUST be in conformance with all applicable local codes, regulations, and the National Electric Code (NEC).

⚠ **WARNING –** Failure to bond pump to pool structure will increase risk for electrocution and could result in injury or death. To reduce the risk of electric shock, see installation instructions and consult a professional electrician on how to bond pump. Also, contact a licensed electrician for information on local electrical codes for bonding requirements.

Notes to the electrician:

Use a solid copper conductor, size 8 or larger. Run a continuous wire from external bonding lug to reinforcing rod or mesh. Connect a No. 8 AWG (8.4 mm^2) solid copper bonding wire to the pressure wire connector provided on the motor housing and to all metal parts of swimming pool, spa, or hot tub, and to all electrical equipment, metal piping (except gas piping), and conduit within 5 ft. (1.5 m) of inside walls of swimming pool, spa, or hot tub. **IMPORTANT -** Reference NEC codes for all wiring standards including, but not limited to, grounding, bonding and other general wiring procedures.

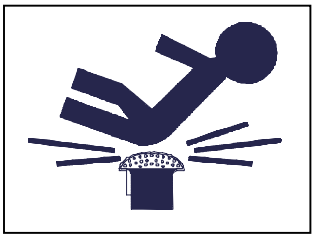

⚠ **WARNING – Suction Entrapment Hazard.**
Suction in suction outlets and/or suction outlet covers which are damaged, broken, cracked, missing, or unsecured cause severe injury and/or death due to the following entrapment hazards:

Hair Entrapment- Hair can become entangled in suction outlet cover.
Limb Entrapment- A limb inserted into an opening of a suction outlet sump or suction outlet cover that is damaged, broken, cracked, missing, or not securely attached can result in a mechanical bind or swelling of the limb.
Body Suction Entrapment- A differential pressure applied to a large portion of the body or limbs can result in an entrapment.
Evisceration/ Disembowelment- A negative pressure applied directly to the intestines through an unprotected suction outlet sump or suction outlet cover which is damaged, broken, cracked, missing, or unsecured can result in evisceration/disembowelment.
Mechanical Entrapment- There is potential for jewelry, swimsuits, hair decorations, fingers, toes, or knuckles to be caught in an opening of a suction outlet cover resulting in mechanical entrapment.

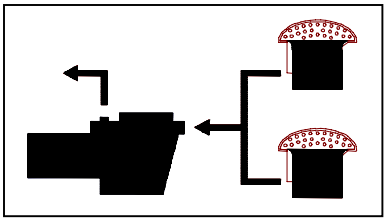

⚠ **WARNING - To Reduce the risk of Entrapment Hazards:**
- When outlets are small enough to be blocked by a person, a minimum of two functioning suction outlets per pump must be installed. Suction outlets in the same plane (i.e. floor or wall), must be installed a minimum of three feet (3') [0.91 meter] apart, as measured from near point to near point.
- Dual suction fittings shall be placed in such locations and distances to avoid "dual blockage" by a user.
- Dual suction fittings shall not be located on seating areas or on the backrest for such seating areas.
- The maximum system flow rate shall not exceed the values shown in the "Pipe Sizing Chart" found at the bottom of page 5 of this manual.
- Never use pool or spa if any suction outlet component is damaged, broken, cracked, missing, or not securely attached.
- Replace damaged, broken, cracked, missing, or not securely attached suction outlet components immediately.
- In addition to two or more suction outlets per pump installed in accordance with latest IAF (formerly NSPI) standards and CPSC guidelines, follow all national, state, and local codes applicable.
- Installation of a vacuum release or vent system, which relieves entrapping suction, is recommended.

⚠ **WARNING – Hazardous Pressure.** Pool and spa water circulation systems operate under hazardous pressure during start-up, normal operation, and after pump shut-off. Stand clear of circulation system equipment during pump start-up. Failure to follow safety and operation instructions could result in violent separation of the pump housing and cover due to pressure in the system, which could cause property damage, severe personal injury, or death. Before servicing pool and spa water circulation system, all system and pump controls must be in off position and filter manual air relief valve must be in open position. Before starting system pump, all system valves must be set in a position to allow system water to return back to the pool. Do not change filter control valve position while system pump is running. Before starting system pump, fully open filter manual air relief valve. Do not close filter manual air relief valve until a steady stream of water (not air or air and water mix) is discharged from the valve. All suction and discharge valves **MUST** be **OPEN** when starting the circulation system. Failure to do so could result in severe personal injury and/or property damage.

⚠ **WARNING – Separation Hazard.** Failure to follow safety and operation instructions could result in violent separation of pump components. Strainer cover must be properly secured to pump housing with strainer cover lock ring. Before servicing pool and spa circulation system, all system and pump controls must be in off position and filter manual air relief valve must be in open position. Do not operate pool and spa circulation system if a system component is not assembled properly, damaged, or missing. Do not operate pool and spa circulation system unless filter air relief valve body is in locked position in filter upper body. All suction and discharge valves **MUST** be **OPEN** when starting the circulation system. Failure to do so could result in severe personal injury and/or property damage.

⚠ **WARNING –** Never operate or test the circulation system at more than 50 PSI.

⚠ **WARNING – Fire and burn hazard.** Motors operate at high temperatures and if they are not properly isolated from any flammable structures or foreign debris they can cause fires, which may cause severe personal injury or death. It is also necessary to allow the motor to cool for at least 20 minutes prior to maintenance to minimize the risk for burns.

⚠ **WARNING –** Failure to install according to defined instructions may result in severe personal injury or death.

General Information

Introduction

This manual contains information for the proper installation and operation of the Hayward TriStar Pump Series. The instructions in this manual **MUST** be followed precisely. **Failure to install according to defined instructions will void warranty.**

Product Benefits

The new TriStar Pump's advanced fluid dynamic design optimizes the three essential pump elements to deliver superior flow, energy efficiency, and quietness. Plus, the heavy-duty pump and motor construction operates cooler for years of dependability. It is the first to feature a Tri-Lock cam and ramp strainer cover design that closes with less than a quarter turn, and the TriStar's super-sized, smooth no-rib basket with extra leaf-holding capacity is easy to clean. TriStar has a variety of bases available to seamlessly retrofit to existing filtration systems.

Product Specifications

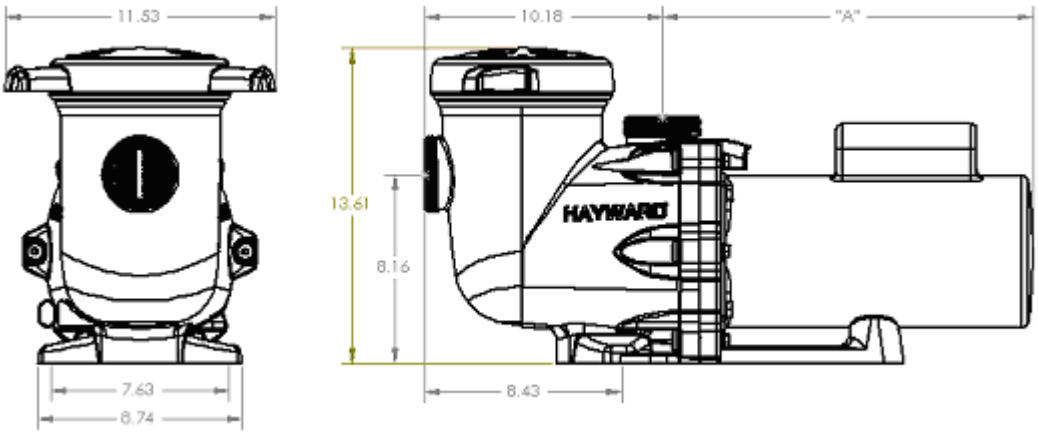

HP	FR "A"	MR "A"
½	13 5/8"	-
¾	13 7/8"	13 3/8"
1	14 3/8"	13 7/8"
1 *	14 3/8"	-
1 ½	14 7/8"	13 7/8"
1 ½ *	14 7/8"	14 3/8"
2	14 7/8"	15 1/8"
2 *	14 7/8"	14 7/8"
2 **	13 1/2"	-
2 ½	-	14 7/8"
2 ½ *	-	14 7/8"
3	17 1/8"	15 5/8"
3 **	14 1/2"	-
5	17 1/8"	-

* Two-Speed Pump
** Three-Phase Pump

Installation Instructions

⚠ **WARNING –** This product should be installed and serviced only by a qualified professional.

Pump Location

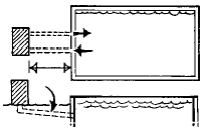

Locate pump as close to pool as practical and run suction lines as direct as possible to reduce friction loss. Suction lines should have continuous slope upward from lowest point in line. Joints must be tight (but not over-tightened). Suction line diameter must equal or be larger than the discharge line diameter.

Though the pump is designed for outdoor use, it is strongly advised to place pump and filter in the shade to shield them from continuous direct heat. Select a well-drained area that will not flood when it rains. **Do NOT install pump and filter in a damp or non-ventilated location.** Keep motor clean. Pump motors require free circulation of air for cooling.

Pump Mounting

Install pump on a level concrete slab or other rigid base to meet all local and national codes. Secure pump to base with screws or bolts to further reduce vibration and stress on pipe or hose joints. The base must be level, rigid, and vibration free.

Pump mount must:

- Allow pump inlet height to be as close to water level as possible.
- Allow use of short, direct suction pipe (to reduce friction losses).
- Allow for gate valves in suction and discharge piping.
- Be protected from excess moisture and flooding.
- Allow adequate access for servicing pump and piping.

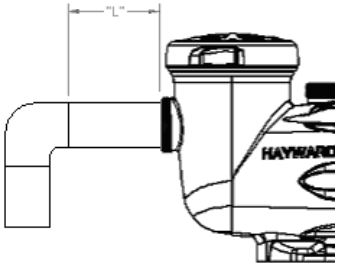

Pipe Sizing Chart

MAXIMUM RECOMMENDED SYSTEM FLOW RATE BY PIPE SIZE								
Pipe Size [mm]	Flow Rate GPM [LPM]	Suction Pipe Length *	**Pipe Size** [mm]	Flow Rate GPM [LPM]	Suction Pipe Length *	**Pipe Size** [mm]	Flow Rate GPM [LPM]	Suction Pipe Length *
1" [32]	20 [75]	5"	**1 ½"** [50]	45 [170]	7 ½"	**2 ½"** [75]	110 [415]	12 ½"
1 ¼" [40]	30 [110]	6 ¼"	**2"** [63]	80 [300]	10"	**3"** [90]	160 [600]	15"

*** NOTE -** It is recommended that a minimum length of straight piping (shown as "L" in above diagram), equivalent to 5 pipe size diameters, be used between the pump suction inlet and any plumbing fittings (elbows, valves, etc.).

Pump Mounting (cont'd.)

⚠ **WARNING – Hazardous Pressure.** Pumps, filters, and other equipment/ components of a swimming pool filtration system operate under pressure. Incorrectly installed and/or improperly tested filtration equipment and/or components may fail resulting in severe personal injury or death.

Plumbing

Use **Teflon tape** to seal threaded connections on molded plastic components. All plastic fittings must be new or thoroughly cleaned before use. **NOTE - Do NOT use Plumber's Pipe Dope as it may cause cracking of the plastic components.** When applying **Teflon tape** to plastic threads, wrap the entire threaded portion of the male fitting with one to two layers of tape. Wind the tape clockwise as you face the open end of the fitting, beginning at the end of the fitting. The pump suction and outlet ports have molded-in thread stops. **Do NOT attempt to force hose connector fitting past this stop.** It is only necessary to tighten fittings enough to prevent leakage. Tighten fitting by hand and then use a tool to engage fitting an additional 1 ½ turns. Use care when using Teflon tape as friction is reduced considerably; **do NOT over-tighten fitting or you may cause damage**. If leaks occur, remove connector, clean off old Teflon tape, re-wrap with one to two additional layers of Teflon tape, and re-install connector.

Fittings restrict flow. For better efficiency, use the fewest possible fittings (but at least two suction outlets). Avoid fittings that could cause an air trap. Pool and spa fittings MUST conform to the International Association of Plumbing and Mechanical Officials (IAPMO) standards. Use a non-entrapping suction fitting in pool (multiple drains) or double suction (skimmer and main drain).

Electrical

⚠ **WARNING –** All electrical wiring MUST be in conformance with all applicable local codes, regulations, and the National Electric Code (NEC). Ground and bond motor before connecting to electrical power supply. Failure to ground and bond pump motor can cause serious or fatal electrical shock hazard. Do NOT ground to a gas supply line. To avoid dangerous or fatal electrical shock, turn OFF power to motor before working on electrical connections. **Fire Hazard - match supply voltage to motor nameplate voltage.** Insure that the electrical supply available agrees with the motor's voltage, phase, and cycle, and that the wire size is adequate for the HP (kW) rating and distance from the power source. Use copper conductors only.

Voltage

Voltage at motor **MUST NOT** be more than 10% above or below motor name plate rated voltage, or motor may overheat, causing overload tripping and reduced component life. If voltage is less than 90% or more than 110% of rated voltage when motor is running at full load, consult power company.

Grounding And Bonding

Install, ground, bond, and wire motor in accordance with local or national electrical code requirements.

Permanently ground motor. Use green ground terminal provided under motor canopy or access place; use size and type wire required by code. Connect motor ground terminal to electrical service ground.

Bond motor to pool structure. Bonding will connect all metal parts within and around the pool with a continuous wire. Bonding reduces the risk of a current passing between bonded metal objects, which could potentially cause electrical shock if grounded or shorted. **Reference NEC codes for all wiring standards including, but not limited to, grounding, bonding and general wiring procedures.**

Use a solid copper conductor, size 8 or larger. Run wire from external bonding lug to reinforcing rod or mesh. Connect a No. 8 AWG (8.4 mm^2) solid copper bonding wire to the pressure wire connector provided on the motor housing and to all metal parts of swimming pool, spa, or hot tub, and to all electrical equipment, metal piping (except gas piping), and conduit within 5 ft. (1.5 m) of inside walls of swimming pool, spa, or hot tub.

Electrical (cont'd.)

Wiring

⚠ **WARNING –** All electrical wiring MUST be in conformance with all applicable local codes, regulations, and the National Electric Code (NEC).

Pump MUST be permanently connected to circuit. If other lights or appliances are also on the same circuit, be sure to add their amp loads before calculating wire and circuit breaker sizes. Use the load circuit breaker as the Master On-Off switch.

Motor Specifications

	Motor Brake Horsepower	Motor Rated Horsepower	Motor Electric V/A		Wire Size / Breaker	
	HP (kW)	HP (kW)	Voltage	Amps	AWG	Amps
Full Rate Pumps	0.99 (0.74)	0.50 (0.37)	208 - 230 / 115	5.3 - 4.9 / 9.8	14	10 / 15
	1.39 (1.04)	0.75 (0.56)	208 - 230 / 115	7.0 - 6.2 / 12.4	14	10 / 15
	1.85 (1.38)	1.00 (0.75)	208 - 230 / 115	8.5 - 7.4 / 14.8	14 / 12	15 / 20
	2.40 (1.79)	1.50 (1.12)	208 - 230 / 115	11.2 - 10.2 / 20.4	14 / 10	15 / 30
	2.70 (2.01)	2.00 (1.49)	208 - 230	11.8 - 11.0	14	15
	2.70 (2.01) **	2.00 (1.49) **	208 - 230 **	7.0 - 6.6 **	14 **	10 **
	3.60 (2.69)	3.00 (2.24)	208 - 230	16.0 - 14.8	12	20
	3.60 (2.69) *	3.00 (2.24) *	208 - 230 / 460 *	9.6 - 9.4 / 4.7 *	14 *	15 / 10 *
	5.00 (3.73)	5.00 (3.73)	208 - 230	21.0 - 19.4	10	30
	1.85 / 0.22 (1.38 / 0.16)	1.00 / 0.12 (0.75 / 0.09)	208 - 230	8.6 - 8.2 [1]	14	15
	2.40 / 0.28 (1.79 / 0.21)	1.50 / 0.18 (1.12 / 0.13)	208 - 230	11.4 - 10.4 [2]	14	15
	2.70 / 0.33 (2.01 / 0.25)	2.00 / 0.25 (1.49 / 0.19)	208 - 230	12.4 - 11.2 [3]	14	15
Max Rate Pumps	0.94 (0.70)	0.75 (0.56)	230 / 115	5.4 / 10.8	14	10 / 15
	1.25 (0.93)	1.00 (0.75)	230 / 115	7.0 / 14.0	14 / 12	10 / 20
	1.65 (1.23)	1.50 (1.12)	230 / 115	7.7 / 15.4	14 / 12	10 / 20
	2.20 (1.64)	2.00 (1.49)	230 / 115	10.8 / 21.6	14 / 10	15 / 30
	2.60 (1.94)	2.50 (1.86)	230	11.5	14	15
	3.45 (2.57)	3.00 (2.24)	230	13.5	12	20
	1.85 / 0.22 (1.38 / 0.16)	1.50 / 0.18 (1.12 / 0.13)	208 - 230	8.6 - 8.2 [1]	14	15
	2.40 / 0.28 (1.79 / 0.21)	2.00 / 0.25 (1.49 / 0.19)	208 - 230	11.4 - 10.4 [2]	14	15
	2.70 / 0.33 (2.01 / 0.25)	2.50 / 0.30 (1.86 / 0.22)	208 - 230	12.4 - 11.2 [3]	14	15
50 Hz Pumps	0.75 (0.56)	0.75 (0.56)	220 / 110	7.0 / 14.0	14 / 12	10 / 20
	1.00 (0.75)	1.00 (0.75)	220 / 110	8.0 / 16.0	14 / 12	10 / 20
	1.50 (1.12)	1.50 (1.12)	220 / 110	9.8 / 19.6	14 / 10	15 / 30
	2.00 (1.49)	2.00 (1.49)	220	11.0	14	15
	3.00 (2.24)	3.00 (2.24)	220	12.0	14	15
	3.00 (2.24) *	3.00 (2.24) *	380 - 415 / 190 *	4.9 - 4.8 / 9.8 *	14 *	10 / 15 *

[1, 2, 3] Low Speed Amps: ([1] 2.8 - 3.0) ([2] 3.2 - 3.4) ([3] 3.8 - 4.1)
* Three-Phase (3Φ) Pump - motor starter required
** Three-Phase (3Φ) Pump - variable-speed applications only (Not available as a stand-alone pump. May only be used with SP3220VSC.)

Start-Up & Operation

Prior to Start-Up

NOTE - If it is necessary to perform a pressure test, prior to initial use to ensure pump is functioning properly, then the following criteria should be maintained for this test:

1. Have a professional perform this test.
2. Ensure all pump and system components are sealed properly to prevent leaks.
3. Remove any trapped air in the system by fully opening filter manual air relief valve until a steady stream of water (not air or air and water mix) is discharged from the valve.
4. Allow no more than 50 psi (345 kPa) at a water temperature no higher than 100° F (38° C).
5. Run pressure test for no longer than 24 hours. Immediately inspect all parts to verify they are intact and functioning properly.

Prior to Start-Up (cont'd.)

⚠ **WARNING - If pump is being pressure tested (50 PSI MAXIMUM), be sure pressure has been released, using the filter manual air relief valve, before removing strainer cover.**

⚠ **WARNING –** All suction and discharge valves **MUST** be **OPEN**, as well as filter air relief valve (if available) on filter, when starting the circulating pump system. Failure to do so could result in severe personal injury.

Starting/Priming the Pump:

Fill strainer housing with water to suction pipe level. If water leakage occurs from anywhere on the pump or filter, DO NOT start the pump. If no leakage occurs, stand at least 10 feet from pump and/or filter and proceed with starting the pump.

⚠ **WARNING –** Return to filter to close filter manual air relief valve when a steady stream of water (not air or air and water) is discharged from valve. Failure to do so could result in severe personal injury.

⚠ **ATTENTION – NEVER OPERATE THE PUMP WITHOUT WATER**. Water acts as a coolant and lubricant for the mechanical shaft seal. NEVER run pump dry. Running pump dry may damage seals, causing leakage, flooding, and voids warranty. Fill strainer housing with water before starting motor.

⚠ **ATTENTION –** Do NOT add chemicals to pool/spa system directly in front of pump suction. Adding undiluted chemicals may damage pump and voids warranty.

⚠ **ATTENTION –** Before removing strainer cover:

1. **STOP PUMP** before proceeding.
2. **CLOSE VALVES** in suction and outlet pipes.
3. **RELEASE ALL PRESSURE** from pump and piping system using filter manual air relief valve. **See filter owner's manual for more details.**
4. If water source is higher than the pump, pump will prime itself when suction and outlet valves are opened. If water source is lower than the pump, unscrew and remove strainer cover; fill strainer housing with water.
5. Clean and lubricate strainer cover O-ring with "Jack's 327" if necessary.
6. Replace strainer cover on strainer housing; turn clockwise to tighten cover.
   NOTE - Tighten strainer cover lock ring by hand only (no wrenches).

Before re-starting pump, see "**Starting/Priming the Pump"** instructions.

⚠ **ATTENTION –** Wait five (5) seconds before re-starting pump. Failure to do so may cause reverse rotation of motor and consequent serious pump damage.

Turn on power and wait for pump to prime, which may take up to five (5) minutes. Priming time will depend on vertical length of suction lift and horizontal length of suction pipe. If pump does NOT prime within five minutes, stop motor and determine cause. Be sure all suction and discharge valves are open when pump is running. See Troubleshooting Guide.

Maintenance

- Clean strainer basket regularly. Do NOT strike basket to clean. Inspect strainer cover gasket regularly and replace as necessary.
- Hayward pumps have self-lubricating motor bearings and shaft seals. No lubrication is necessary.
- Keep motor clean. Insure motor air vents are free from obstruction to avoid damage. Do NOT use water to hose off motor.
- Occasionally, shaft seals must be replaced, due to wear or damage. Replace with genuine Hayward seal assembly kit. See "Shaft Seal Change Instructions" in this manual.

Storage/Winterization

⚠ **WARNING – Separation Hazard.** Do not purge the system with compressed air. Purging the system with compressed air can cause components to explode, with risk of severe injury or death to anyone nearby. Use only a low pressure (below 5 PSI), high volume blower when air purging the pump, filter, or piping.

⚠ **ATTENTION –** Allowing the pump to freeze will void the warranty.

⚠ **ATTENTION –** Use ONLY propylene glycol as antifreeze in your pool/spa system. Propylene glycol is non-toxic and will not damage plastic system components; other anti-freezes are highly toxic and may damage plastic components in the system.

Drain all water from pump and piping when expecting freezing temperatures or when storing pump for a long time (see instructions below). Gravity drain system as far as possible.

Keep motor dry and covered during storage. To avoid condensation/corrosion problems, do NOT cover or wrap pump with plastic film or bags.

Storing Pump For Winterization

⚠ **WARNING –** To avoid dangerous or fatal electrical shock hazard, turn OFF power to motor before draining pump. Failure to disconnect power may result in serious personal injury or death.

1. Drain water level below all inlets to the pool.
2. Remove drain plugs and strainer cover from strainer housing. (See Parts Diagram on page 11 of this manual for pump component locations.)
3. Disconnect pump from mounting pad, wiring (after power has been turned OFF), and piping.
4. Once the pump is removed of water, re-install the strainer cover and drain plugs. Store pump in a dry area.

Shaft Seal Change Instructions

IMPORTANT SAFETY INSTRUCTIONS
PLEASE READ AND FOLLOW ALL INSTRUCTIONS

When servicing electrical equipment, basic safety precautions should always be observed including the following. Failure to follow instructions may result in injury.

A. ⚠ **WARNING –** To reduce risk of injury, do not permit children to use this product.
B. Disconnect all electrical power service to pump before beginning shaft seal replacement.
C. Only qualified personnel should attempt rotary seal replacement. Contact your local authorized Hayward Dealer or service center if you have any questions.

Exercise extreme care in handling both the rotating and the stationary sections of the two-part replacement seal. Foreign matter or improper handling will easily scratch the graphite and ceramic sealing surfaces.

Shaft Seal Change Instructions (cont'd.)

Removing the Motor Assembly (See Parts Diagram on page 11 of this manual for pump component locations.)

1. Remove the six (6) 5/16" x 2" hex head bolts (item #17), which hold the motor assembly to the pump/strainer housing (item #3), using a 1/2" wrench or socket.
2. Slide the motor assembly out of the pump/strainer housing (item #3), exposing the diffuser (item #9). Remove the two diffuser screws (item #7), and pull the diffuser (item #9) off of the seal plate (item #15) to expose the impeller (item #12).

Removing the Impeller (See Parts Diagram on page 11 of this manual for pump component locations.)

3. Remove the motor canopy by removing the two (2) screws and pulling the canopy away from the motor.
4. To prevent motor shaft from turning, carefully place a 7/16" open-end wrench over the two (2) flats on the end of the shaft.
5. Rotate the impeller screw (item #10) clockwise (note that screw has left-hand thread) and remove. Remove the impeller (item #12) by rotating counterclockwise.

Removing the Ceramic Seat (See Parts Diagram on page 11 of this manual for pump component locations.)

6. Remove the spring seal assembly (item #13) and seal plate (item #15) from the motor by removing the four (4) 3/8" x 1" bolts (item #18) that secure it to the motor, using a 9/16" wrench or socket. Remove the motor support bracket (item #20) from the seal plate (item #15).
7. Press the ceramic seat with rubber cup out of the seal plate (item #15). If tight, use a small screwdriver to tap seal out.
   STOP - Clean all recesses & parts to be reassembled. Inspect gaskets & replace if necessary.

Seal Installation (See Parts Diagram on page 11 of this manual for pump component locations.)

8. Clean and lightly lubricate the motor shaft and seal recesses in the seal plate (item #15) with a dilute solution of non-granulated liquid-type soap. Gently wipe the polished face of the ceramic seal with a soft cotton cloth. Lubricate the rubber cup on the ceramic seat and press it firmly into the recess of the seal plate (item #15), with the polished ceramic surface facing out.
9. Reassemble the motor to the seal plate (item #15) using the four (4) 3/8" x 1" bolts (item #18), and re-attach the motor support (item #20) to the seal plate (item #15).
10. Gently wipe the black, polished surface of the spring seal assembly (item #13) with a soft cotton cloth.
11. Press the spring seal assembly (item #13) onto the motor shaft, with the black polished surface facing the ceramic seat.

Replacing the Impeller and Diffuser (See Parts Diagram on page 11 of this manual for pump component locations.)

12. Screw the impeller (item #12) onto the motor shaft in a clockwise direction, and screw the impeller screw (item #10) into the motor shaft in a counterclockwise direction. Tighten snugly by holding motor shaft with wrench as noted in step #4. Place the impeller ring (item #11) back onto the impeller (item #12), with flange facing towards the diffuser (item #9).
13. Place the diffuser (item #9) over the impeller (item #12) and onto the seal plate (item #15), aligning the three pins on the diffuser (item #9) with the three holes on the seal plate (item #15). Replace the two diffuser screws (item #7).

Replacing the Motor Assembly (See Parts Diagram on page 11 of this manual for pump component locations.)

14. Re-attach motor canopy using the two (2) hex headed screws. Slide the motor assembly, with the diffuser (item #9) in place, into pump/strainer housing (item #3), being careful not to disturb the diffuser gasket (item #8).
15. Fasten assembly to pump/strainer housing (item #3) using the six (6) 5/16" x 2" bolts (item #17). (Be sure housing gasket (item #14) is in place, and lubricated. Replace if damaged). Tighten bolts alternately and evenly to 185 inch-pounds according to housing bolt torque pattern detail.

Replacement Parts

Parts Diagram

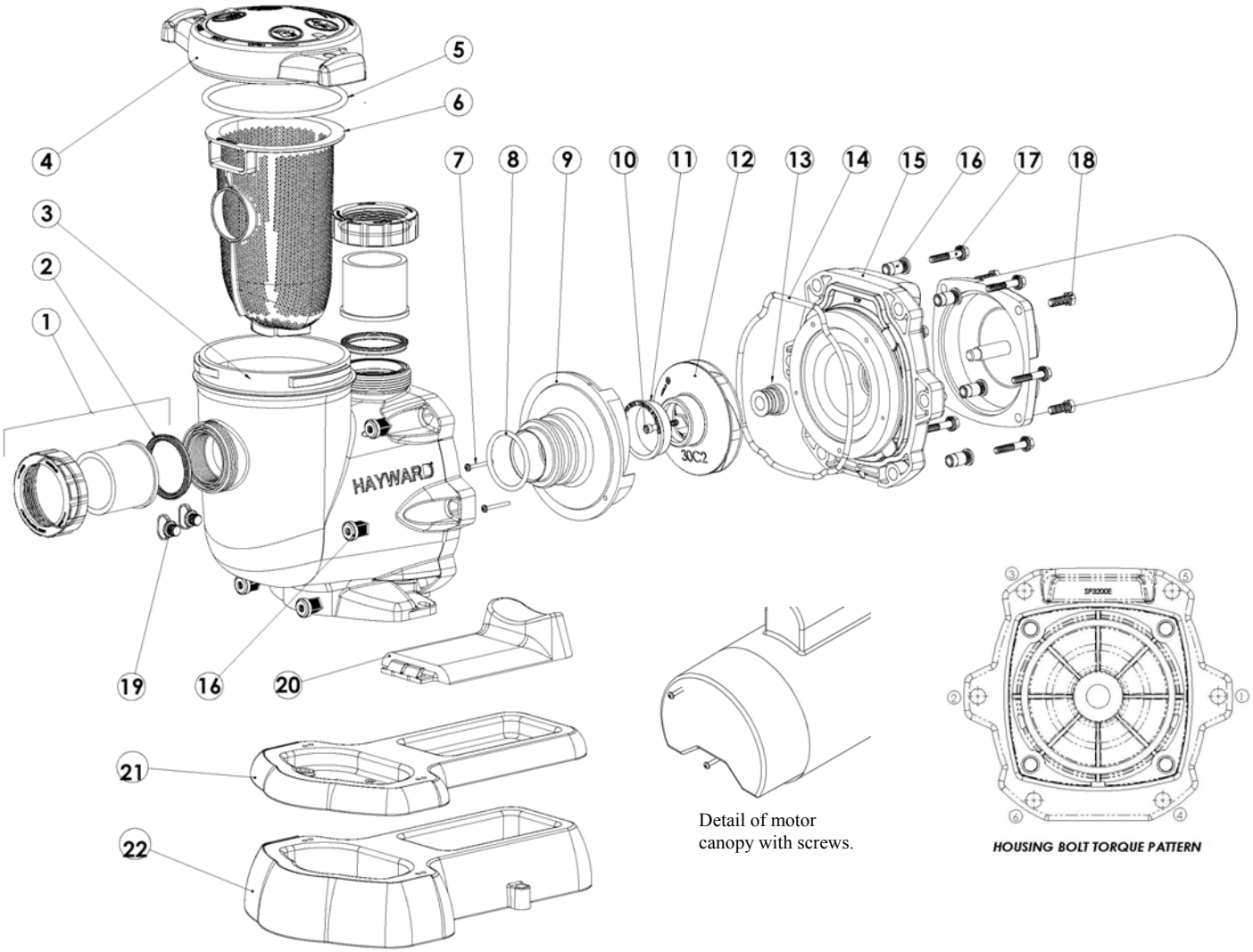

Parts Listing

Ref. No.	Part No.	Description	Ctn. Qty.
1	SPX3200UNKIT	Union Connector Kit (Includes Union Nut, Union Connector, Union Gasket - 2 ea.)	1
2	SPX3200UG	Union Gasket	1
3	SPX3200A	Pump Strainer Housing, 2” x 2 1/2” with Drain Plugs, threaded style	1
4	SPX3200DLS	Strainer Cover Kit (Includes Strainer Cover, Lock Ring, O-Ring)	10
	SPX3200DLSB	Strainer Cover Kit (Biguanide Sanitizer Applications Only; **NOT** Pressure Testable)	10
5	SPX3200S	Strainer Cover O-Ring	10
6	SPX3200M	Strainer Basket	15
7	SPX3200Z8	Diffuser Screw	1
8	SPX4000Z1	Diffuser O-Ring	10
9	SPX3200B3	Diffuser	1
10	SPX3200Z1	Impeller Screw	1
11	SPX3021R	Impeller Ring	1

Parts Listing (cont'd.)

Ref. No.	Part No.	Description	Ctn. Qty.
12	SPX3205C	Impeller for ½ HP with Impeller Screw	10
	SPX3207C	Impeller for ¾ HP with Impeller Screw	10
	SPX3207CM	Impeller for 1 HP with Impeller Screw (Max Rate)	10
	SPX3210C	Impeller for 1 HP with Impeller Screw (Full Rate)	10
	SPX3215C	Impeller for 1 ½ HP with Impeller Screw	10
	SPX3220C	Impeller for 2 HP with Impeller Screw (Full Rate)	10
	SPX3220CM	Impeller for 2 ½ HP with Impeller Screw (Max Rate)	10
	SPX3230C	Impeller for 3 HP with Impeller Screw	10
	SPX3230C5	Impeller for 5 HP with Impeller Screw	10
13	SPX3200SA	Shaft Seal Assembly	10
14	SPX3200T	Housing O-Ring	10
15	SPX3200E	Seal Plate	1
16	SPX3200Z211	Housing Insert/Seal Plate Spacer Kit	1
17	SPX3200Z3	Housing Bolt	10
18	SPX3200Z5	Motor Bolt	1
19	SPX4000FG	Drain Plug with O-Ring	10
20	SPX3200GA	Bracket, Motor Support, TriStar	1
21 *	SPX3200WF	Base, Short Riser, TriStar	1
22 *	SPX3200SR	Base, Tall Riser, TriStar	1

Pump SKU Detail

	Model P/N	Motor P/N	Power End P/N (1)	Impeller P/N
Full Rate Pumps	SP3205EE	SPX3205Z1BER	SPX3205Z1PE	SPX3205C
	SP3207EE	SPX3207Z1BER	SPX3207Z1PE	SPX3207C
	SP3210EE	SPX3210Z1BER	SPX3210Z1PE	SPX3210C
	SP3215EE	SPX3215Z1BER	SPX3215Z1PE	SPX3215C
	SP3220EE	SPX3220Z1BER	SPX3220Z1PE	SPX3220C
	SP3230EE	SPX3230Z1BER	SPX3230Z1PE	SPX3230C
	SP3250EE	SPX3240Z1MER	SPX3250Z1PE	SPX3230C5
	SP32102EE	SPX3210Z2BER	SPX3210Z2PE	SPX3210C
	SP32152EE	SPX3215Z2BER	SPX3215Z2PE	SPX3215C
	SP32202EE	SPX3220Z2BER	SPX3220Z2PE	SPX3220C
	SP322063EEV (2)	SPX3220Z1DRV (2)	SPX3220Z1PE3V (2)	SPX3215C
	SP323063EE	SPX3230Z1DR	SPX3230Z1PE3	SPX3230C
Max Rate Pumps	SP3205X7	SPX3205Z1MR	SPX3205X7Z1PE	SPX3205C
	SP3207X10	SPX3207Z1MR	SPX3207X10Z1PE	SPX3207CM
	SP3210X15	SPX3210Z1MR	SPX3210X15Z1PE	SPX3210C
	SP3215X20	SPX3215Z1MR	SPX3215X20Z1PE	SPX3215C
	SP3220X25	SPX3220Z1MR	SPX3220X25Z1PE	SPX3220CM
	SP3225X30	SPX3225Z1MR	SPX3225X30Z1PE	SPX3230C
	SP3210X152	SPX3210Z2MER	SPX3210X15Z2PE	SPX3210C
	SP3215X202	SPX3215Z2MER	SPX3215X20Z2PE	SPX3215C
	SP3220X252	SPX3220Z2MER	SPX3220X25Z2PE	SPX3220C
50 Hz Pumps	SP3205X751	SPX3205Z1MCR	N/A	SPX3207C
	SP3207X1051	SPX3207Z1MCR	N/A	SPX3210C
	SP3210X1551	SPX3210Z1MCR	N/A	SPX3215C
	SP3215X2051	SPX3215Z1MCR	N/A	SPX3220C
	SP3225X3051	SPX3220Z1MCR	N/A	SPX3230C
	SP3225X3053	SPX3230Z1DR	N/A	SPX3230C

NOTE: (1) Power end assembly includes parts #7-18 and motor.
(2) Variable-speed applications only (Not available as a stand-alone pump. May only be used with SP3220VSC.)

* STA-RITE is a registered trademark of Sta-Rite Industries, Inc. and WHISPERFLO is a registered trademark of Pentair Water Pool & Spa, Inc., which are used herein for identification purposes only. These are retrofit bases for existing STA-RITE and WHISPERFLO pump installations. Sta-Rite Industries, Inc. and Pentair Water Pool & Spa, Inc. are not affiliated with Hayward Pool Products.

Troubleshooting

Motor Will NOT Start – Check For:

Make sure the terminal board connections agree with the wiring diagram on motor data plate label. Be sure motor is wired for available field supply voltage (see pump operating label).

1. Improper or loose wiring connections; open switches or relays; tripped circuit breakers, or blown fuses.
Solution: Check all connections, circuit breakers, and fuses. Reset tripped breakers or replace blown fuses.
2. Manually check rotation of motor shaft for free movement and lack of obstruction.
Solution: Refer to Steps 4 & 5 of "Shaft Seal Change Instructions" in this manual.
3. If you have a timer, be certain it is working properly. Bypass it if necessary.

Motor Shuts OFF – Check For:

1. Low voltage at motor or power drop (frequently caused by undersized wiring or extension cord use).
Solution: Contact qualified professional to check that the wiring gauge is heavy enough.

NOTE: Your Hayward pump motor is equipped with an "automatic thermal overload protector." The motor will automatically shut off if power supply drops before heat damage can build up causing windings to burn out. The "thermal overload protector" will allow the motor to automatically restart once the motor has cooled. It will continue to cut On/Off until the problem is corrected. **Be sure to correct cause of overheating.**

Motor Hums, But Does NOT Start – Check For:

1. Impeller jammed with debris.
Solution: Have a qualified repair professional open the pump and remove the debris.

Pump Won't Prime, Check For:

1. Empty pump/strainer housing.
Solution: Make sure pump/strainer housing is filled with water and cover o-ring is clean. Ensure o-ring is properly seated in the cover o-ring groove. Ensure o-ring sealing surface is lubricated with "Jack's 327" and that strainer cover is locked firmly in position. Lubricant will help to create a tighter seal.
2. Loose connections on suction side.
Solution: Tighten pipe/union connections.
NOTE - Any self-priming pump will not prime if there are suction air leaks. Leaks will result in bubbles emanating from return fittings on pool wall.
3. Leaking O-ring or packing glands on valves.
Solution: Tighten, repair, or replace valves.
4. Strainer basket or skimmer basket loaded with debris.
Solution: Remove strainer housing cover or skimmer cover, clean basket, and refill strainer housing with water. Tighten cover.
5. Suction side clogged.
Solution: Contact a qualified repair professional.
Block off to determine if pump will develop a vacuum. You should have 5" - 6" of vacuum at the strainer cover **(Only your pool dealer can confirm this with a vacuum gauge)**. You may be able to check by removing the skimmer basket and holding your hand over the bottom port with skimmer full and pump running. If no suction is felt, check for line blockage.
    a. If pump develops a vacuum, check for blocked suction line or dirty strainer basket. An air leak in the suction piping may be the cause.
    b. If pump does not develop a vacuum and pump has sufficient "priming water":
        i. Re-check strainer housing cover and all threaded connections for suction leaks. Check if all system hose clamps are tight.
        ii. Check voltage to ensure that the motor is rotating at full RPM's.
        iii. Open housing cover and check for clogging or obstruction in suction. Check impeller for debris.
        iv. Remove and replace shaft seal only if it is leaking.

Low Flow – Generally, Check For:

1. Clogged or restricted strainer or suction line.
Solution: Contact a qualified repair professional.

Low Flow – Generally, Check For: (cont'd.)

2. Undersized pool piping.
Solution: Correct piping size.
3. Plugged or restricted discharge line of filter, valve partially closed (high gauge reading).
Solution: Sand filters – backwash as per manufacturer's instructions; D.E. filters – backwash as per manufacturer's instructions; Cartridge filters – clean or replace cartridge.
4. Air leak in suction (bubbles issuing from return fittings).
Solution: Re-tighten suction and discharge connections using Teflon tape. Inspect other plumbing connections and tighten as required.
5. Plugged, restricted, or damaged impeller.
Solution: Replace including new seal assembly.

Noisy Pump – Check For:

1. Air leak in suction piping, cavitations caused by restricted or undersized suction line or leak at any joint, low water level in pool, and unrestricted discharge return lines.
Solution: Correct suction condition or throttle return lines, if practical. Holding hand over return fitting will sometimes prove this point or putting in a smaller eyeball fitting.
2. Vibration due to improper mounting, etc.
Solution: Mount the pump on a level surface and secure the pump to the equipment pad.
3. Foreign matter in pump housing. Loose stones/debris hitting impeller could be cause.
Solution: Clean the pump housing.
4. Motor bearings noisy from normal wear, rust, overheating, or concentration of chemicals causing seal damage which will allow chlorinated water to seep into bearings wiping out the grease causing bearing to whine.
Solution: All seal leaks should be replaced at once.

© Hayward Pool Products, 2005
All rights reserved.

PRODUCT REGISTRATION
(Retain For Your Records)

DATE OF INSTALLATION _____

INITIAL PRESSURE GAUGE READING (CLEAN FILTER) _____

PUMP MODEL _____ HORSEPOWER _____

FILTER MODEL _____ SERIAL NUMBER _____

HAYWARD® LIMITED WARRANTY

This pump was inspected before shipment from our plant. To original purchasers of this pump, Hayward Pool Products, 620 Division Street, Elizabeth, New Jersey, warrants its products free from defects in materials and workmanship for a period of **ONE (1)** year from the date of purchase.

Parts which fail or become defective during the warranty period, except as a result of freezing, negligence, improper installation, use, or care, shall be repaired or replaced, at our option, without charge, within 90 days of the receipt of defective product, barring unforeseen delays.

To obtain warranty replacements or repair, defective components or parts should be returned, transportation paid, to the place of purchase, or to the nearest authorized Hayward service center. For further Hayward dealer or service center information, contact Hayward customer service department. No returns may be made directly to the factory without the express written authorization of Hayward Pool Products.

To original purchasers of this pump, Hayward Pool Products warrants its pump housing/strainer to be free from defects in materials and workmanship for a period of **ONE (1)** year from the date of purchase.

Pump housing/strainers which become defective during the warranty period, except as a result of freezing, negligence, improper installation, use or care, or as the result of a use in association with an automatic valving system, shall be repaired, at our option, without charge.

All other conditions and terms of the standard warranty apply.

Hayward shall not be responsible for cartage, removal and/or reinstallation labor or any other such costs incurred in obtaining warranty replacements.

The Hayward Pool Products warranty does not apply to components manufactured by others. For such products, the warranty established by the respective manufacturer will apply.

Some states do not allow a limitation on how long an implied warranty lasts, or the exclusion or limitation of incidental or consequential damages, so the above limitation or exclusion may not apply to you.

This warranty gives you specific legal rights, and you may also have other rights, which vary from state to state.

Hayward Pool Products
620 Division Street
Elizabeth, NJ 07207

***Supersedes all previous publications.**

▲Retain this Warranty Certificate (upper portion) in a safe and convenient location for your records.

▼DETACH HERE: Fill out bottom portion completely and mail within 10 days of purchase/installation, or register online at WWW.HAYWARDPOOL.COM.

✂ ----------

Mail to: **Hayward Pool Products, 620 Division Street, Elizabeth, NJ 07207, Attn: Warranty Dept.**

HAYWARD®

Warranty Registration Card

Name_____

Address_____

City_____ **State**_____ **Zip**_____

E-mail Address_____

Product Model No._____

Product Serial No. _____

☐ **New Installation** ☐ **Replacement**

Type of In-Ground Pool:

☐ **Vinyl** ☐ **Fiberglass** ☐ **Gunite**

Size of Pool_____

Years pool has been in service ☐ less than 1 ☐ 1-3 ☐ 3-5 ☐ 5-10

Purchased from:_____

Company name_____

Address_____

City_____ **State**_____ **Zip**_____

Please send me more information on these other products from Hayward:

☐ **Pump** ☐ **Filter** ☐ **Automatic Pool Cleaner** ☐ **Light**
☐ **Chlorinator** ☐ **Skimmer** ☐ **Heater** ☐ **Heat Pump**
☐ **Salt/Chlorine Generator** ☐ **Controls**