ClearWater II™ DE

This is True Spiral Laminar flow in an above ground filter.

Spiral Laminar flow ensures even distribution of D.E. for maximum filtration. The ClearWater II D.E. Filter features automatic regeneration, Waterway's Safety Lock Ring system for safe operation and maintenance, and a ten year warranty on its rugged glass-filled polymer body.

Features:

- True Spiral Laminar flow for even disbursement of D.E.
- Automatic hydraulic regeneration
- High flow rate
- 1 ½" or 2" drain ports available
- Flush-mounted pressure gauge
- Low-profile air relief plug
- Modular grid system for easy maintenance
- Automatic air bleed capability
- Heavy-duty lid handle for easy servicing
- Dual Speed pump meets CEC Title 20 Code

Waterway™

2200 East Sturgis Road, Oxnard, California 93030 • **Ph. 805-981-0262** • Fax 805-981-9403
waterway@waterwayplastics.com • **www.waterwayplastics.com**

Made in the USA

807-0056.0312

©2012 Waterway Plastics

ClearWater II D.E. Filter Deluxe System with Supreme 1-Speed or 2-Speed Pump

Part No.	Filter	Filtration Area	Flow Rate	Pump	Speed	HP	Volts	Pool Turnover 6 Hours	Pool Turnover 8 Hours
FDS044107-3	FD12-7	12 sq. ft.	44 GPM	PSP2100-3R	2	1.0	115	15,840	21,120
FDS067107-3	FD18-7	18 sq. ft.	67 GPM	PSP2100-3R	2	1.0	115	24,120	32,160
FDS067157-3	FD18-7	18 sq. ft.	67 GPM	PSP2150-3R	2	1.5	115	24,120	32,160
FDS044107-3S	FD12-7	12 sq. ft.	44 GPM	PSP1100-3R	1	1.0	115	15,840	21,120
FDS067107-3S	FD18-7	18 sq. ft.	67 GPM	PSP1100-3R	1	1.0	115	24,120	32,160
FDS067157-3S	FD18-7	18 sq. ft.	67 GPM	PSP1150-3R	1	1.5	115	24,120	32,160
3 foot cord - Twist-Lock plug									
FDS044107-6	FD12-7	12 sq. ft.	44 GPM	PSP2100-6R	2	1.0	115	15,840	21,120
FDS067107-6	FD18-7	18 sq. ft.	67 GPM	PSP2100-6R	2	1.0	115	24,120	32,160
FDS067157-6	FD18-7	18 sq. ft.	67 GPM	PSP2150-6R	2	1.5	115	24,120	32,160
FDS044107-6S	FD12-7	12 sq. ft.	44 GPM	PSP1100-6R	1	1.0	115	15,840	21,120
FDS067107-6S	FD18-7	18 sq. ft.	67 GPM	PSP1100-6R	1	1.0	115	24,120	32,160
FDS067157-6S	FD18-7	18 sq. ft.	67 GPM	PSP1150-6R	1	1.5	115	24,120	32,160
3 foot cord - 3-wire NEMA (regular) plug									

Systems include: 2 hoses (1 ½" x 6 ft.) • hose fittings, hose clamps, union adapter • 3 ft. cord Twist Lock plug, or 3 ft. cord NEMA plug • Gate valve • deluxe one-piece base

ClearWater II D.E. Filter Standard System with Hi-Flo 1-Speed or 2-Speed Pump

Part No.	Filter	Filtration Area	Flow Rate	Pump	Speed	HP	Volts	Pool Turnover 6 Hours	Pool Turnover 8 Hours
522-5007-3S	FD12-7	12 sq. ft.	44 GPM	PH2100-3R	2	1.0	115	15,840	21,120
522-5027-3S	FD18-7	18 sq. ft.	67 GPM	PH2100-3R	2	1.0	115	24,120	32,160
522-5037-3S	FD18-7	18 sq. ft.	67 GPM	PH2150-3R	2	1.5	115	24,120	32,160
520-5007-3S	FD12-7	12 sq. ft.	44 GPM	PH1100-3R	1	1.0	115	15,840	21,120
520-5027-3S	FD18-7	18 sq. ft.	67 GPM	PH1100-3R	1	1.0	115	24,120	32,160
520-5037-3S	FD18-7	18 sq. ft.	67 GPM	PH1150-3R	1	1.5	115	24,120	32,160
3 foot cord - Twist-Lock plug									
522-5007-6S	FD12-7	12 sq. ft.	44 GPM	PH2100-6R	2	1.0	115	15,840	21,120
522-5027-6S	FD18-7	18 sq. ft.	67 GPM	PH2100-6R	2	1.0	115	24,120	32,160
522-5037-6S	FD18-7	18 sq. ft.	67 GPM	PH2150-6R	2	1.5	115	24,120	32,160
520-5007-6S	FD12-7	12 sq. ft.	44 GPM	PH1100-6R	1	1.0	115	15,840	21,120
520-5027-6S	FD18-7	18 sq. ft.	67 GPM	PH1100-6R	1	1.0	115	24,120	32,160
520-5037-6S	FD18-7	18 sq. ft.	67 GPM	PH1150-6R	1	1.5	115	24,120	32,160
3 foot cord - 3-wire NEMA (regular) plug									

Systems include: 2 hoses (1 ½" x 6 ft.) • hose fittings, hose clamps, union adapter • 3 ft. cord Twist Lock plug, or 3 ft. cord NEMA plug • Gate valve • standard one-piece base

ClearWater II D.E. Filter Systems (without Supreme Pump)

	Part No.	Filter	Filtration Area
DELUXE	**FDS0447S**	FD12-7	12 sq. ft.
	FDS0677S	FD18-7	18 sq. ft.
STANDARD	**520-5007**	FD12-7	12 sq. ft.
	520-5027	FD18-07	18 sq. ft.

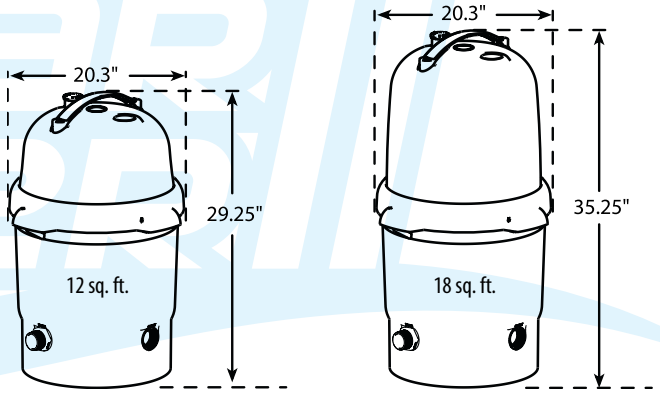

Systems include: 2 hoses (1 ½" x 6 ft.) • hose fittings, hose clamps, union adapter • Gate valve • accessory base

Waterway™

Made in the USA

2200 East Sturgis Road, Oxnard, California 93030 • **Ph. 805-981-0262** • Fax 805-981-9403