BULL Outdoor Products Inc.

Ontario, California 91762

Instruction Manual

MODEL Number: W85747
30" Electric Warming Drawer, Rated 120V, 60 Hz, 8 A

Electrical: 120 Volt, 60 Hz, AC Only 15- or 20- amp.
Use copper wire only. A time-delay or circuit breaker
And separate circuit is recommended.

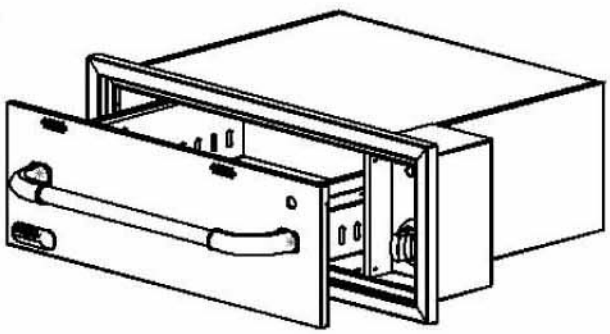

TABLE OF CONTENTS **PAGE**

SAFETY INSTRUCTIONS 2
INSTALLATION INSTRUCTIONS 3
OPERATING INSTRUCTIONS 4
CLEANING & MAINTENANCE 5
TROUBLE SHOOTING GUIDE 5
PARTS LIST 6
WARRANTY 7

READ THE FOLLOWING INSTRUCTIONS CAREFULLY AND BE SURE YOUR WARMING DRAWER IS PROPERLY INSTALLED, ASSEMBLED AND CARED FOR. FAILURE TO FOLLOW THESE INSTRUCTIONS MAY RESULT IN SERIOUS BODILY INJURY AND/OR PROPERTY DAMAGE. IF YOU HAVE QUESTIONS CONCERNING ASSEMBLY OR OPERATION, CONSULT YOUR DEALER OR APPLIANCE SERVICE REPRESENTATIVE.

NOTE TO INSTALLER:
LEAVE THESE INSTRUCTIONS WITH THE CONSUMER AFTER INSTALLATION.

NOTE TO THE CONSUMER
RETAIN THESE INSTRUCTIONS FOR FUTURE REFERENCE.

THIS OUTDOOR COOKING GAS APPLIANCE IS NOT INTENDED TO BE INSTALLED IN OR ON RECREATIONAL VEHICLES AND/OR BOATS.

SAFETY INSTRUCTIONS

Read carefully before operating your warming drawer

Electrical requirements

⚠WARNING

Electrical Shock Hazard

Plug into a grounded 3-prong outlet.

Do not remove ground prong.

Do not use an adapter.

Do not use an extension cord.

Failure to follow these instructions can result in death, fire, or electrical shock.

Important: Observe all governing codes and ordinances.

It is the customer's responsibility:

To contact a qualified electrical installer.

To assure that the electrical installation is adequate and in conformance with National Electrical Code, ANSI/NFPA 70 — latest edition* or CAN/CSA-C22.2 No. 0-M91
CAN/CSA-C22.2 No. 0.4-04
CAN/CSA-C22.2 No. No. 64-M91
UL 1026, 5th Edition
and all local codes and ordinances.

You must have:

☑ 120-volt, 60Hz, AC-only, 15- or 20-amp., fused electrical supply.

☑ outlet located in the cabinet as close as possible to the warming oven.

We recommend:

☑ a time-delay fuse or circuit breaker.

☑ a separate circuit serving this appliance only.

If codes permit and a separate ground wire is used, it is recommended that a qualified electrician determine that the ground path is adequate.

Copies of the standards listed may be obtained from:

* National Fire Protection Association
One Batterymarch Park
Quincy, Massachusetts 02269

** Canadian Electrical Association
178 Rexdale Boulevard

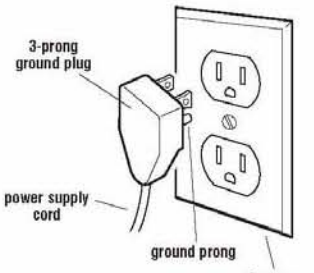

Figure 1

For your personal safety, this appliance must be grounded. This appliance is equipped with a power supply cord having 3-prong ground plug. To minimize possible shock hazard, the cord must be plugged into a mating 3-prong ground-type outlet, grounded in accordance with local codes and ordinances. See Figure 1. If a mating outlet is not available, it is the personal responsibility and obligation of the customer to have a properly grounded 3-prong outlet installed by a qualified electrician.

Warning — Improper connection of the equipment-grounding conductor can result in a risk of electric shock. Check with a qualified electrician or serviceman if you are in doubt as to whether the appliance is properly grounded. Do not modify the plug provided with the appliance - if it will not fit the outlet, have a proper outlet installed by a qualified

IMPORTANT SAFETY INSTRUCTIONS

WARNING: To reduce the risk of fire, electrical shock, injury to persons, or damage when using the warming drawer, follow basic precautions, including the following:

- Proper Installation – Be sure the warming drawer is properly installed and grounded by a qualified technician.
- Do Not Leave Children Alone – Children should not be left alone or unattended in area where warming drawer is in use. They should never be allowed to sit or stand on any part of the warming drawer.
- Wear Proper Apparel – Loose-fitting or hanging garments should never be worn while using the warming drawer.
- User Servicing – Do not repair or replace any part of the warming drawer unless specifically recommended in the manual. All other servicing should be referred to a qualified technician.
- Storage in Warming Drawer – Flammable materials should not be stored in a warming drawer.
- Do Not Use Water on Grease Fires – Smother fire or flame or use dry chemical or foam-type extinguisher.
- Use Care When Opening Door – Let hot air or steam escape before removing or replacing food.
- Use Only Dry Potholders – Moist or damp potholders on hot surfaces may result in burns from steam. Do not let potholder touch hot heating elements. Do not use a towel or other bulky cloth.
- Do Not Heat Unopened Food Containers – Build-up of pressure may cause container to burst and result in injury.
- Placement of Warming Drawer Racks – Always place warming drawer racks in desired location while warming drawer is cool. If rack must be moved while warming drawer is hot, do not let potholder contact hot heating element in warming drawer.
- DO NOT TOUCH HEATING ELEMENTS OR INTERIOR SURFACES OF WARMING DRAWER – Heating elements may be hot even though they are dark in color. Interior surfaces of a warming drawer become hot enough to cause burns. During and after use, do not touch, or let clothing or other flammable materials contact heating elements or interior surfaces of warming drawer until they have had sufficient time to cool. Other surfaces of the warming drawer may become hot enough to cause burns – among these surfaces are warming drawer vent openings and surfaces near these openings and warming drawer doors.

SAVE THESE INSTRUCTIONS

INSTALLATION INSTRUCTIONS

Island Installation

1) Provide a 10" x 28 ½" cutout to the front of the island
2) Provide support beams using metal studs.
3) Pull the drawer out of the drawer casing to gain access on the mounting holder at the front of the casing.
4) Insert the drawer casing into the island opening.
5) Secure the drawer casing with screws at the inside front top and bottom, using the pre-punched mounting holes.
6) Re-assemble the drawer section into the drawer casing.
7) Apply weather proof sealant along the edges of the warmer.
8) Plug-in the warmer to a weather proof, and properly grounded, electrical outlet.

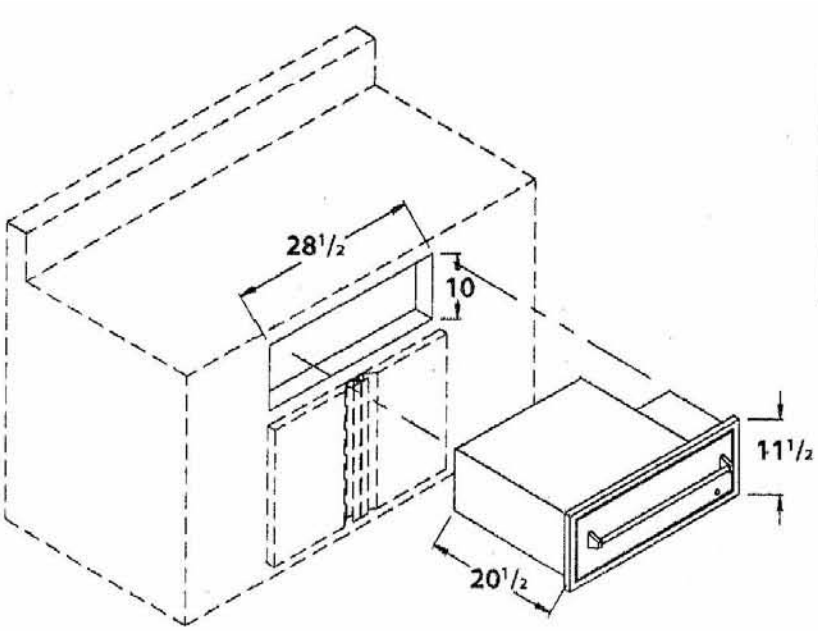

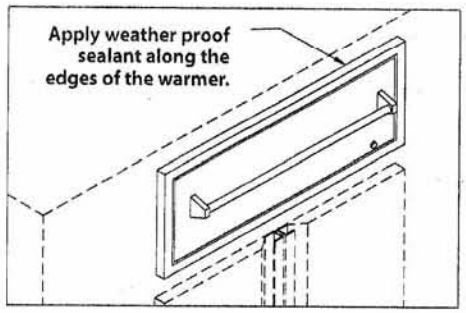

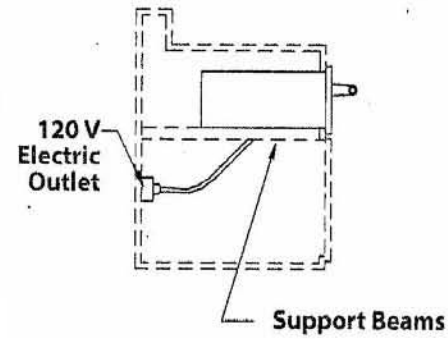

IMPORTANT

- Be sure that the warming drawer is properly grounded and installed by a qualified technician. The electrical cord has a 3 prong plug. Do not cut any of the prongs
- Make sure that the island is free of cracks that would allow water or other liquids to get into the electrical controls.
- Keep the warming drawer away from water sprinklers.
- When not in use, cover the island to protect from rain and harsh weather conditions.

OPERATING INSTRUCTIONS

Temperature Controls

The temperature control dial is used to select the temperature of the warming drawer. It is located on the right hand side of the control panel and has dial settings from 1 to 10. The #1 setting is the lowest temperature, which is around 60°F, while the setting "10" is the highest temperature, which is around 220°F.

The majority of foods are held between temperature settings of 5-6.

The warming drawer should only be opened when adding or removing food. Continuous opening of the drawer allows warm air to escape and make the food colder.

Do not use aluminum foil to line the drawer. It is an excellent heat insulator and will trap heat beneath it. This may affect the performance of the warming drawer and the interior finish.

Heat-On Light

The heat-on light is located above the temperature control knob. The red light turns on when the control knob is set and cycles "on" and "off" with the heating element as temperature is maintained.

Moisture Vent Control

The moisture vent control is located at the top inside of the warming drawer. It can be adjusted in any position between "open" and "close" to maintain desired degree of moisture.

a) For ***crispy foods***, slide the moisture vent control ***inward to open*** the vents and allows the moisture to escape.

b) For ***moist food***, side the moisture vent control ***outward to close*** the vents and seal the moisture inside the drawer

Heating Instructions

1. Dry Heat

a) The main function of the warming drawer is to hold hot cooked foods at serving temperature.

b) Place previously prepared foods directly into the empty steam pans (no water) and set the moisture vent control.

c) For crispy foods, slide the moisture vent control inward to open the vents and allow the moisture to escape.

d) Set the temperature control dial. Heat-on light will appear until the desired temperature is reached.

2. Moist Heat

b) The warming drawer also seals moisture within the drawer to keep the food moist.

c) Put just enough of water, approximately 1/2" high, in the steam pans.

d) Place the steam rack inside the steam pan.

e) Place the food directly on the rack or use a suitable container that will fit in the steam pans. Do not use plastic containers or utensils.

f) Slide the moisture vent control outward to close the vents and seal the moisture inside the drawer.

g) Set the temperature control dial. Heat-on light will appear until the desired temperature is reached.

h) Periodically, check the water level in the steam pans and add water when necessary.

3. Proofing Yeast Dough

a) Yeast dough can be proofed in a warming drawer.

b) Place the dough in a bowl and turn the temperature control at the lowest setting, to facilitate the fermentation process.

.c) Place a towel over the dough to minimize surface drying.

d) Let the dough remain in the warming drawer until it has doubled in size and a slight depression remains when the surface is touched gently with a finger.

CLEANING & MAINTENANCE

The Warming Drawer is made of welded #304 stainless steel. It is non-rusting and non-magnetic.

1. Allow the warming drawer and its accessories to cool before cleaning.
2. Remove steam pans and all accessories from warming drawer.
3. Clean all items including the drawer with the mildest cleanser. Scrub dirt with sponge.
4. When cleaning the front panel, always scrub in the direction of the grain. In order to maintain the luster and highlights of polished surface, do not use abrasives when cleaning polished surfaces. Use the mildest cleaner.
5. Do not use steel wool to clean the drawer and accessories.
6. Check out the slide rails and make sure they are clean and free from debris
7. It is highly recommended to clean the warming drawer after every use.

Trouble Shooting Guide

Problem	What To Do
1. Warming drawer will not heat up. 2. Heat –on light does not come "on".	1. Check if the unit is plugged in to an electrical outlet. 2. Check if the temperature control dial is set properly. 3. Check if the circuit breaker is open.
If service is required:	1. Call your dealer, or authorized service agency. 2. Provide the following information: a. Model number b. Serial number c. Date purchased d. Name of dealer where the unit was purchased from

PARTS LIST

MODEL Number: W85747

30" Electric Warming Drawer, Rated 120V, 60 Hz, 8 A

1	Heating Element	6	Roller Guides
2	Thermostat	7	Drawer Handle
3	Heat on Light	8	Handle Bracket
4	Chrome Bezel	9	Drawer
5	Control Knob	10	Steam Pan Guide

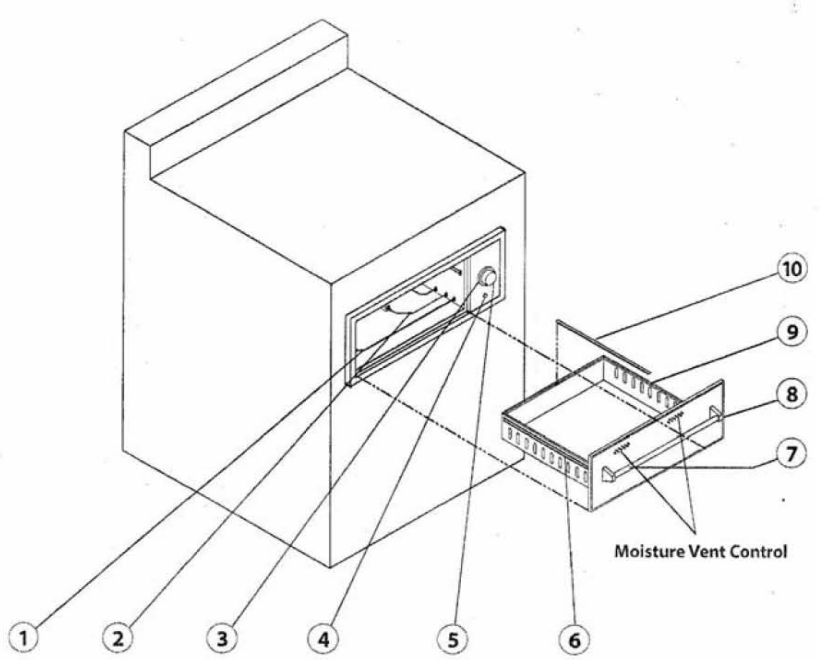

HOW TO ORDER REPLACEMENT PARTS

Please refer to the parts list on this page.
To make sure you obtain the correct replacement parts for your warming drawer, the following information is required to assure getting the correct part.

1. Model number (see data sticker on unit)
2. Reference number of replacement part needed.
3. Description of replacement part needed
4. Quantity of parts needed.

IMPORTANT: Use only factory authorized parts. The use of any part that is not factory authorized can be dangerous. This will also void your warranty.
IMPORTANT: Keep this assembly and operating instruction manual for referral and for replacement parts ordering.

LIMITED WARRANTY

Bull Outdoor Products, Inc. warrants to the original purchaser at the original site of delivery with proof of purchase of each Unit that when subject to normal residential use, it is free from defects in workmanship and materials for the periods specified below. This warranty excludes Units used in rental or commercial applications. It does not apply to rust, corrosion, oxidation or discoloration, which may occur due to moisture or overheating, unless the affected component becomes inoperable. It does not cover labor or labor related charges. There will be shipping and handling charge for the delivery of the warranty part(s).

Limited One-Year Warranty.

All components are warranted to be free from defects in material and workmanship for a period of one year from the original date of purchase. Bull Outdoor Products, Inc. will replace or repair parts found to be devective at no cost to the orginal purchaser.

Our obligation under this warranty is limited to repair or replacement, at our option, of the product during the warranty period. The extent of any liability of Bull Outdoor Products, Inc., under this warranty is limited to repair or replacement. This warranty does not cover normal wear of parts, damage resulting from any of the following: negligent use or misuse of the product, use on improper fuel/gas supply, use contrary to operating instructions, or alteration by any person other than our factory service center The warranty period is not extended by such repair or replacement.

Warranty claim procedure: If you require service or parts for your Bull grill, please contact our Warranty Service Center for factory direct assistance. Our hours of operation are 8AM to 4 PM PST. Our phone number is **(800) 521-2855** and our FAX number is **(909) 988-4051** or email to sales@bullbbq.com. Please direct all correspondence to: **Bull Outdoor Products, Inc., 541 E Main St., Ontario, CA 91761**
ATTN: Warranty Service Center

Product repair as provided under this warranty is your exclusive remedy. Bull Outdoor Products, Inc. shall not be liable for any incidental or consequential damages for breach of any express or implied warranty on its products. Except to the extent prohibited by applicable law, any implied warranty or merchantability or fitness for a particular purpose on this product to the duration of the above warranty. Some states do not allow the exclusion or limitation of incidental or consequential damages, or allow limitations on how long an implied warranty lasts, so the above limitations or exclusions may not apply to you. This warranty gives you specific legal rights, and you may have other rights, which vary from state to state.

Model Number _____ Serial Number _____

Date of Purchased _____ Purchased From _____